Medea

1905

LIFESTYLE

Medea

1905

Index —

Dining room _____ 003
Living room _____ 043
Bedroom _____ 131
Office _____ 181
General index _____ 201

Savini—

Table

design
Umberto Asnago

Tavolo rotondo in legno.
Dettagli in metallo.

Round table in wood.
Metal inserts.

cod. VG402
Ø 150 H 76 cm / *Ø 59" H 29"*

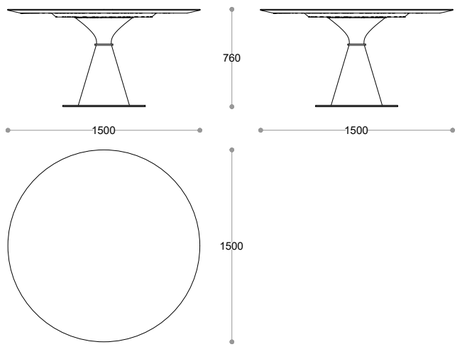





Savini—

Table

design
CRS Medea 1905

Tavolo ovale con struttura in finitura laccata.
Top in marmo o legno.
Dettagli in metallo.

Oval table with lacquered structure.
Top in marble or wood.
Metal inserts.

cod. VG404
L 250 P 150 H 76 cm / *W 98″ D 59″ H 29″*

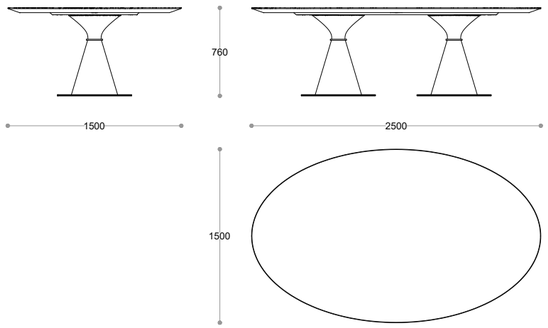



—Tower

Table

design
Umberto Asnago

Tavolo tondo con struttura in legno.
Gamba con inserti in metallo.

Round table with structure in wood.
Leg with metal inserts.

cod. HE404
Ø 160 H 76 cm / *Ø 62″ H 29″*

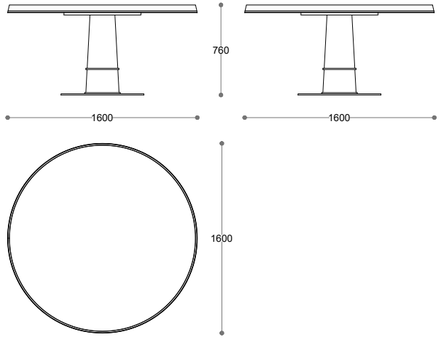



—Tower

Table

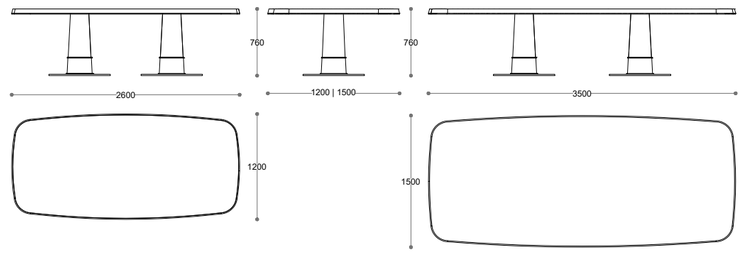

design
Umberto Asnago

Tavolo rettangolare con struttura in legno.
Gambe con inserti in metallo.

Rectangular table with structure in wood.
Legs with metal inserts.

cod. HE403.M2
L 260 P 120 H 76 cm / *W 102" D 47" H 29"*

cod. HE403.M3
L 350 P 150 H 76 cm / *W 137" D 59" H 29"*



Robert —

Table

design
Umberto Asnago

Tavolo con struttura in legno.
Gambe con inserti in metallo.

Table with structure in wood.
Legs with metal inserts.

cod. HE401.M4
L 220 P 120 H 75 cm / *W 86″ D 47″ H 29″*

cod. HE401.M3
L 280 D 120 H 75 cm / *W 110″ D 47″ H 29″*

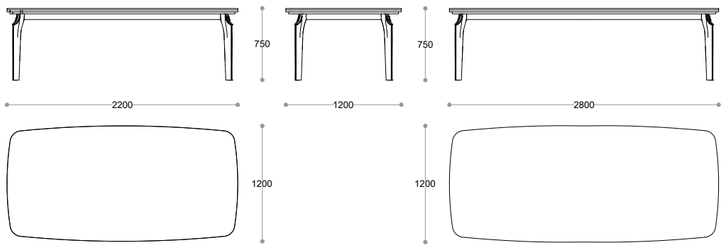





— Fly

Table

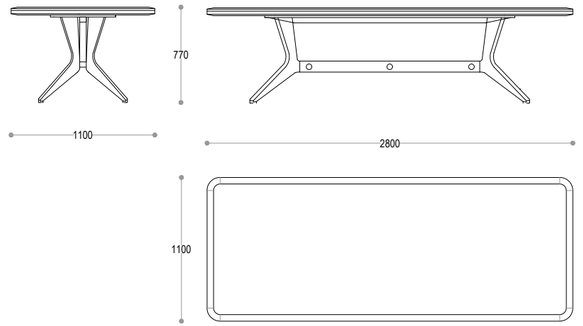

design
Umberto Asnago

Tavolo in legno con top in marmo.

Table in wood with marble top.

cod. HE405
L 280 P 110 H 77 cm / *W 110″ D 43″ H 30″*



Lotus —

Table

design
Studia 54

Tavolo con base in metallo e top in marmo.

Table with metal base and marble top.

cod. MD400
L 250 P 120 H 76 cm / W 98*" D 47" H 29"*

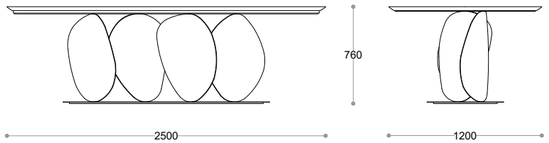

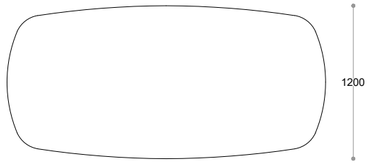







—Grisam

Table

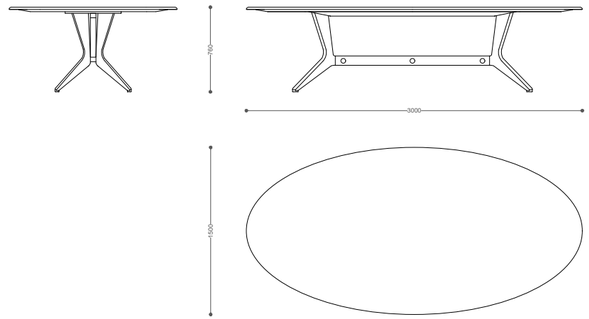

design
CRS Medea 1905

Tavolo in legno con base rivestita
in pelle e piano in marmo.
Inserti in metallo.

Wooden table with leather covered base
and marble top. Metal inserts.

cod. MD401
L 300 P 150 H 76 cm / *W 118″ D 60″ H 30″*





Lily —

Chair

design
Studia 54

Sedia con gambe in legno. Seduta e schienale imbottiti in tessuto o pelle.

Chair with structure in wood. Seat and back upholstered in fabric or leather.

cod. MD100
L 60 P 60 H 80 cm / *W 23″ D 23″ H 31″*

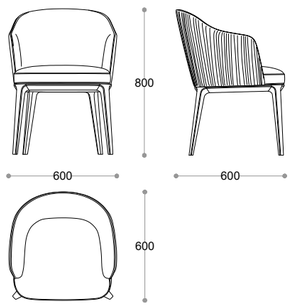



— Ivy

Chair

design
Studia 54

Sedia con gambe in legno. Seduta e schienale imbottiti in tessuto o pelle.

Chair with structure in wood. Seat and back upholstered in fabric or leather.

cod. MD102
L 60 P 60 H 80 cm / *W 23″ D 23″ H 31″*

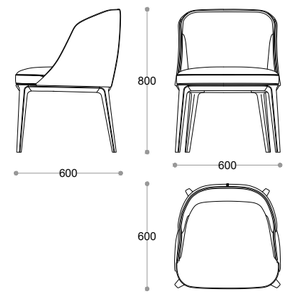



Cannes—

Chair

design
Umberto Asnago

Sedia con gambe in legno e
puntali in metallo.
Seduta e schienale imbottiti.
Rivestimento in tessuto o pelle.

Chair with structure in wood and metal tips.
Seat and back upholstered.
Covered in fabric or leather.

cod. MN204
L 57 P 57 H 80 cm / W 22*″ D 22″ H 31″*

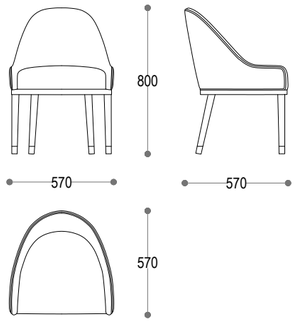





—Antibes

Chair

design
CRS Medea 1905

Sedia con gambe in legno.
Seduta e schienale imbottiti.
Rivestimento in tessuto o pelle.

Chair with structure in wood.
Seat and back upholstered.
Covered with fabric or leather.

cod. MN203
L 50 P 60 H 90 cm / *W 19″ D 23″ H 35″*

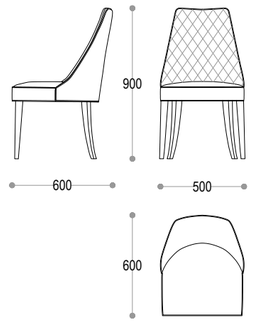





Balin —

Chair

design
Umberto Asnago

Sedia con struttura e gambe in legno rivestito in pelle. Schienale e braccioli rivestiti in pelle. Seduta imbottita e rivestita in pelle.

Chair with wooden frame and legs covered in leather. Back and armrests upholstered in leather. Padded seat covered in leather.

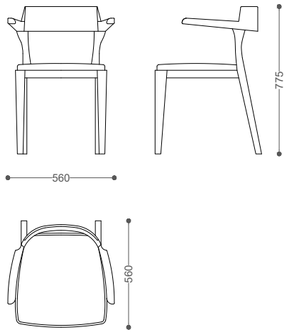

cod. MD109
L 56 P 56 H 77,5 cm/*W 22″ D 22″ H 30″*





Martin–

Chair & Armchair

design
CRS Medea 1905

Sedia e poltroncina con gambe in legno.
Seduta e schienale imbottiti.
Rivestimento in tessuto o pelle.

Chair and armchair with structure in wood.
Seat and back upholstered.
Covered in fabric or leather.

cod. MD106
L 51 P 61 H 86 cm / *W 20" D 24" H 33"*

cod. MD107
L 55,5 P 63 H 86 cm / *W 21" D 24" H 33"*

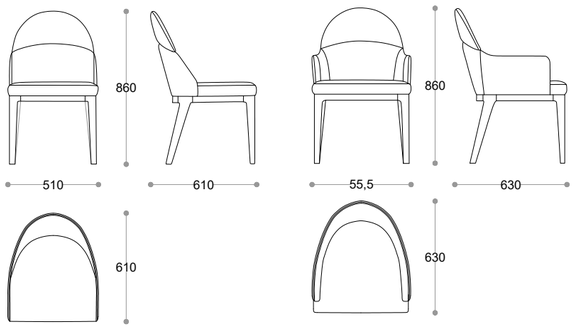



–Rose

Chair & Armchair

design
CRS Medea 1905

Sedia e poltroncina con struttura in legno.
Seduta e schienale imbottiti.
Rivestimento in tessuto o pelle.

Chair and armchair with structure in wood.
Seat and back upholstered.
Covered with fabric or leather.

cod. MD103
L 55 P 64 H 81 cm / *W 21" D 24" H 34"*

cod. MD104
L 60 P 67 H 77 cm / *W 24" D 25" H 31"*

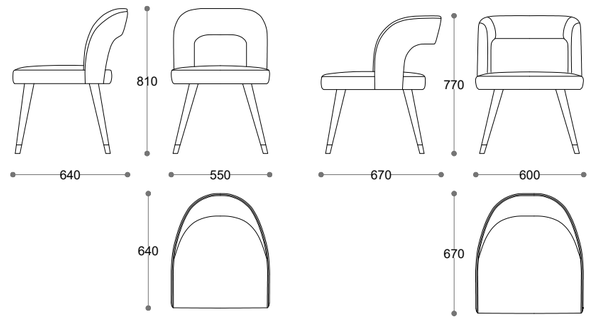



Marigold —

Sideboard

design
Studia 54

Credenza con struttura in legno e inserti in pelle.
Top in marmo o specchio.
Dettagli in metallo.

Sideboard in wooden structure and leather inserts.
Top in marble or mirror.
Metal details.

cod. MD605
L 215 P 55 H 75 cm / *W 84" D 21" H 29"*

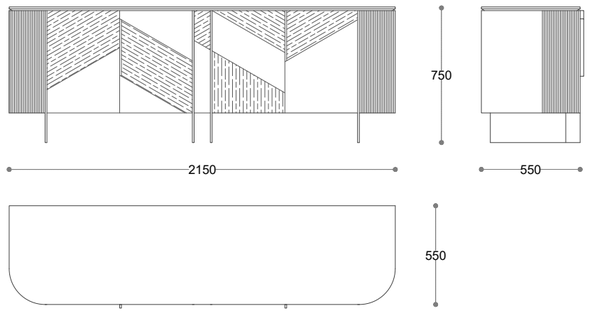





— Juliet

Sideboard

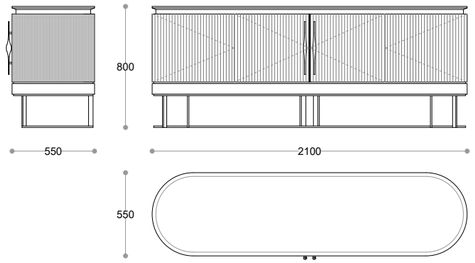

design
Studia 54

Credenza con struttura in legno
e inserto in pelle.
Base e maniglie in metallo.
Top in marmo o specchio.

Sideboard with wooden structure
and leather insert.
Metal handles and legs.
Top available in marble or mirror.

cod. MD601
L 210 P 55 H 80 cm / *W 82″ D 21″ H 31″*



Visconti—

Sideboard

design
Matteo Nunziati

Credenza con struttura in legno.
Top in marmo o legno.
Dettagli in metallo.

Sideboard with structure in wood.
Top in marble or wood.
Metal details.

cod. MI601.M1
L 250 P 54 H 70 cm / W *98″ D 21″ H 27″*

cod. MI601.M2
L 180 P 54 H 70 cm / W *70″ D 21″ H 27″*

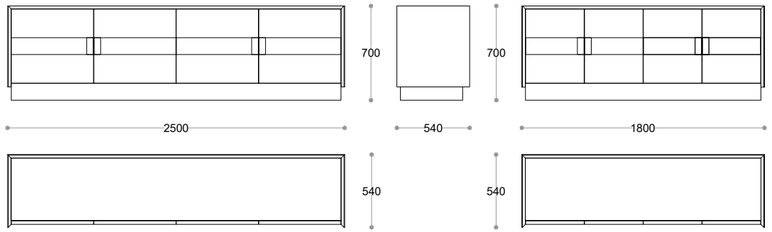



—Cavour

Sideboard

design
CRS Medea 1905

Credenza con struttura in legno,
frontali e maniglie in cuoio.

Sideboard with structure in wood.
Front panels and handles in
rawhide leather.

cod. MN601.M1
L 198 P 45 H 55 cm / W 77″ D 17″ H 21″

cod. MN601.M2
L 244 P 45 H 71 cm / W 96″ D 17″ H 27″

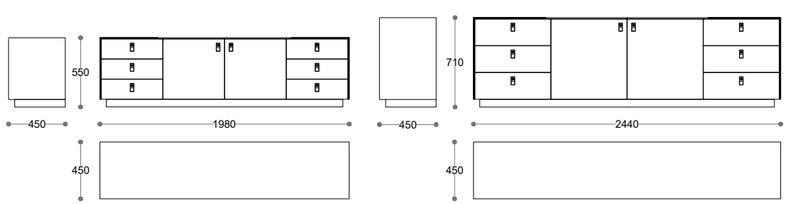



— Juliet

Bar Cabinet

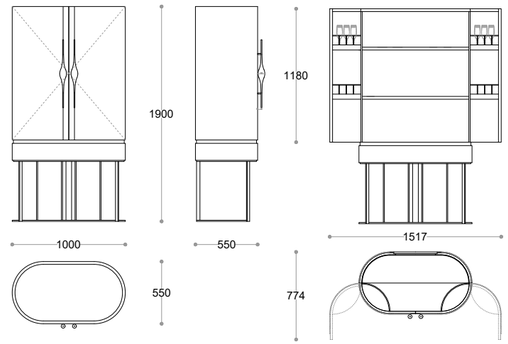

design
Studia 54

Mobile bar con struttura in legno
e inserto in pelle.
Base e maniglie in metallo.

Bar cabinet with wooden structure
and leather insert.
Metal handles and base.

cod. MD702
L 100 P 55 H 190 cm / *W 39" D 21" H 74"*



Index —

Dining room _____ 003

Living room _____ 043

Bedroom _____ 131

Office _____ 181

General index _____ 201



Oleander —

Sofa

design
Studia 54

Divano componibile imbottito con rivestimento in tessuto o pelle.

Modular sofa upholstered in fabric or leather.

cod. MD550
L 415 P 105-310 H 85 cm (*)
W *163" D 41-122" H 33"* (*)

(*) Altri moduli disponibili a listino.
(*) *Other modules available in the price list.*

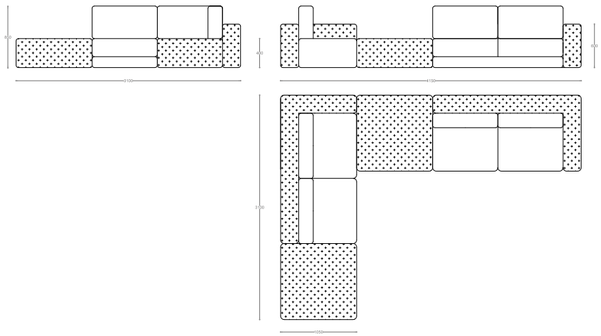







Medea 1905 | Lifestyle

—Thomas

Sofa

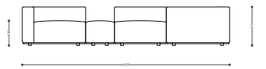



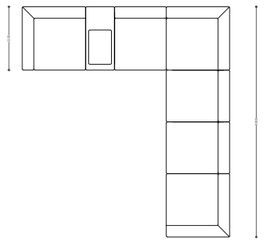

design
CRS Medea 1905

Divano componibile imbottito con rivestimento in tessuto o pelle. Basamento in metallo.

Modular sofa upholstered in fabric or leather. Metal basement.

cod. VG550
L 360 P 110 - 400 H 67 cm (*)
W 141″ D 43 - 157″ H 26″ (*)

(*) Altri moduli disponibili a listino.
(*) *Other modules available in the price list.*





—Liam

Sofa

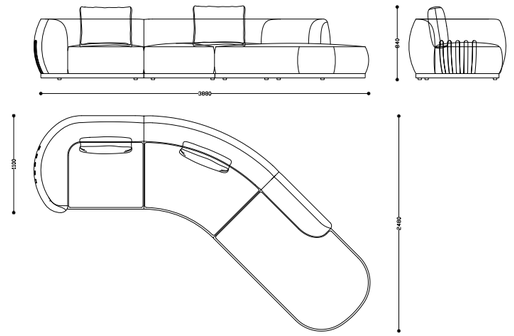

design
Ervas Basilico Girardi

Divano componibile imbottito,
con rivestimento in pelle.
Basamento e inserti in pelle.

Modular sofa with base and insert in leather.
Upholsteredin leather.

cod. MD580.C1
L 388 P 110 - 248 H 84 cm (*)
W 141" D 43 - 97" H 33" (*)

(*) Altri moduli disponibili a listino.
(*) *Other modules available in the price list.*



Liam —

Sofa

design
Ervas Basilico Girardi

Divano componibile imbottito, con rivestimento in pelle.
Basamento e inserti in pelle.

Modular sofa with base and insert in leather.
Upholsteredin leather.

cod. MD580.C2
L 254 P 108 - 137 H 84 cm (*)
W 100″ D 42 - 53″ H 33″ (*)

(*) Altri moduli disponibili a listino.
(*) *Other modules available in the price list.*

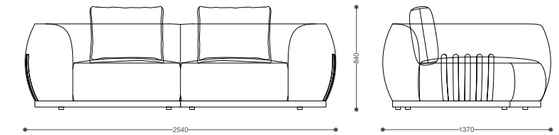

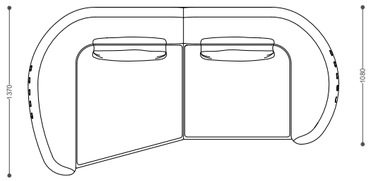







—Maxim

Sofa

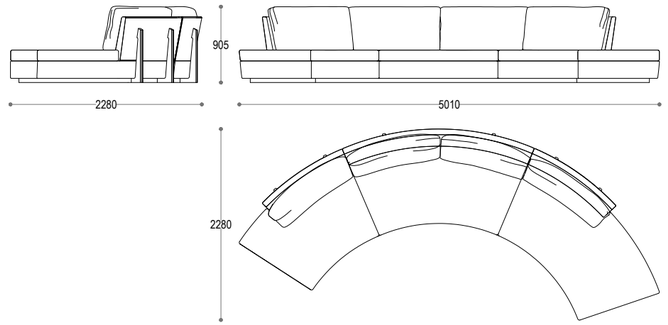

design
Umberto Asnago

Divano componibile con basamento in legno.
Rivestimento in tessuto o pelle.

Modular sofa with base in wood.
Upholstered in fabric or leather.

cod. MN508
L 501 P 228 H 90,5 cm (*)
W 141" D 43 - 97" H 33" (*)

(*) Altri moduli disponibili a listino.
(*) *Other modules available in the price list.*



Margot —

Sofa

design
CRS Medea 1905

Divano con struttura in legno e lavorazione capitonnè. Rivestimento in tessuto o pelle. Basamento in legno. Disponibile anche con schienale capitonnè e seduta liscia.

Sofa with wooden structure and capitonnè technique. Upholstered in fabric or leather. Base in wood. Also available with capitonnè backrest and plain seat.

cod. HE502
L 200 P 100 H 83 cm / *W 78″ D 39″ H 33″*
cod. HE503
L 256 P 100 H 83 cm / *W 100″ D 39″ H 33″*

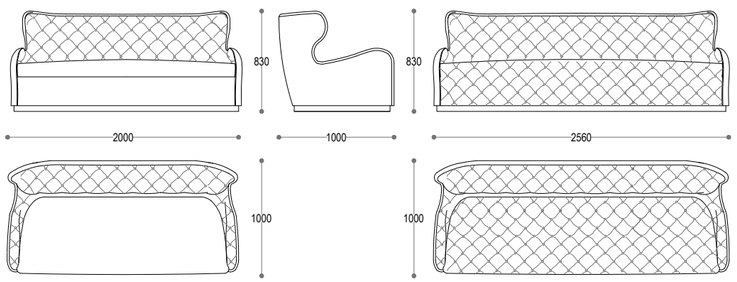









—Colbert

Sofa

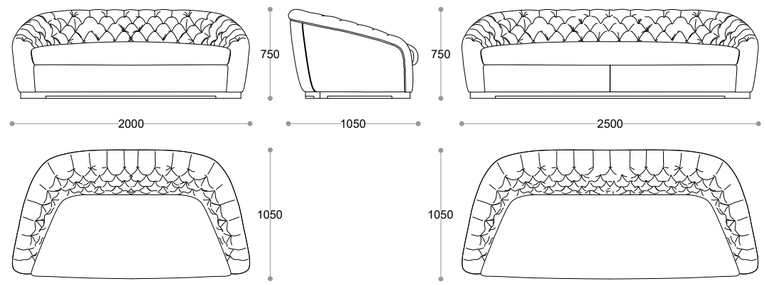

design
Umberto Asnago

Divano imbottito con rivestimento in tessuto o pelle.

Upholstered sofa, covered in fabric or leather.

cod. VG502
L 200 P 105 H 75 cm / *W 78″ D 41″ H 29″*

cod. VG503
L 250 P 105 H 75 cm / *W 98″ D 41″ H 29″*



Peony —

Dormeuse

design
Studia 54

Dormeuse imbottita con base in metallo.
Possibilità di avere il bracciolo destro o sinistro.

Upholstered dormeuse with metal base.
Left or right armrest to be choosen.

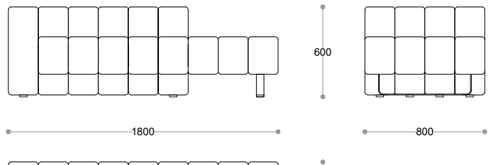

cod. MD520
L 180 P 80 H 60 cm / *W 70″ D 31″ H 23″*

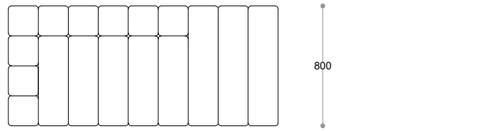



— Eva

Armchair

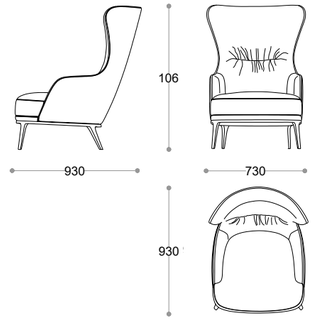

design
Studia 54

Poltrona imbottita rivestita in tessuto o in pelle.

Upholstered armchair in fabric or leather.

cod. MD510
L 73 P 93 H 106 cm / *W 28″ D 36″ H 41″*



Brera —

Armchair

design
CRS Medea 1905

Poltrona con struttura in legno e lavorazione capitonnè. Rivestimento in tessuto o pelle.

Armchair with wooden structure and capitonnè. Upholstered in fabric or leather.

cod. HE505
L 83 P 80 H 114 cm / *W 32" D 31" H 44"*

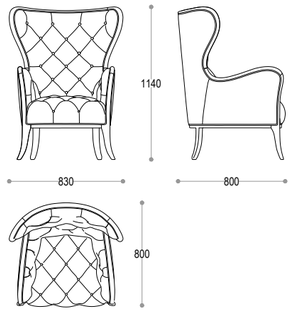





Dahlia—

Armchair

design
Studia 54

Poltrona imbottita rivestita in tessuto o in pelle.

Upholstered armchair, covered in fabric or leather.

cod. MD210
L 86 P 87 H 88 cm / *W 33" D 34" H 34"*

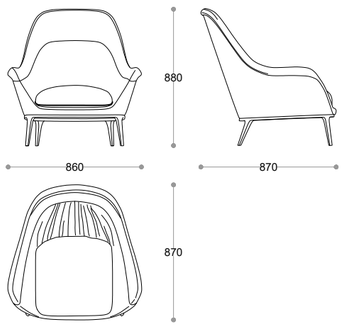





— Lily

Armchair

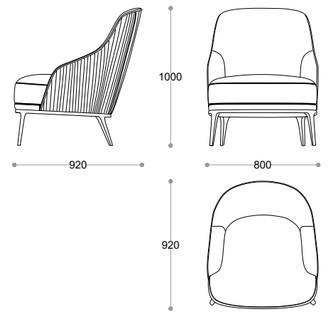

design
Studia 54

Poltrona con rivestimento in tessuto o pelle.

Upholstered armchair, covered in fabric or leather.

cod. MD201
L 80 P 92 H 100 cm / *W 31" D 36" H 38"*



Mandy —

Armchair

design
Umberto Asnago

Poltrona imbottita rivestita in tessuto o in pelle.

Upholstered armchair, covered in fabric or leather.

cod. MN511
L 78 P 90 H 93 cm / *W 30″ D 35″ H 36″*

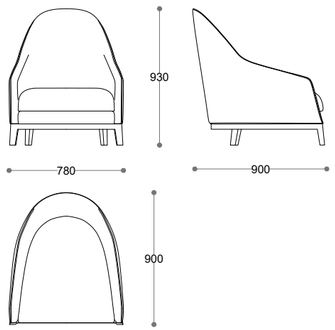









Manila—

Armchair

design
Umberto Asnago

Poltrona con struttura in legno.
Rivestimento in tessuto o pelle.

Armchair with structure in wood.
Upholstered in fabric or leather.

cod. MI541
L 83 P 74 H 73 cm / *W 32″ D 29″ H 28″*

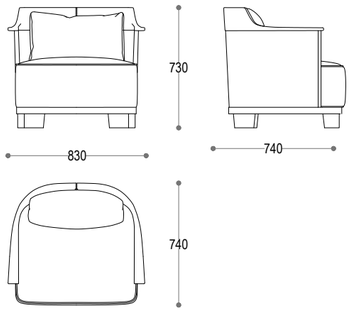



Martin—

Armchair

design
CRS Medea 1905

Poltrona con gambe in legno.
Seduta e schienale imbottiti.
Rivestimento in tessuto o pelle.

Armchair with structure in wood.
Upholstered seat and back.
Covered in fabric or leather.

cod. MD203
L 70 P 71 H 86,5 cm / *W 27″ D 27″ H 34″*

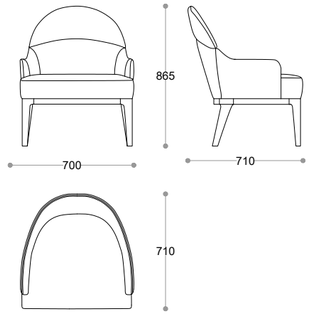



—Rose

Armchair

design
CRS Medea 1905

Poltrona con struttura in legno.
Seduta e schienale imbottiti.
Rivestimento in tessuto o pelle.

Armchair with structure in wood.
Upholstered seat and back.
Covered in fabric or leather.

cod. MD202
L 73 P 72 H 76 cm / *W 28″ D 28″ H 29″*

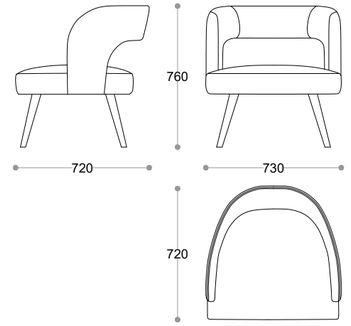



Martin–

Stool

design
CRS Medea 1905

Sgabello con gambe in legno.
Seduta e schienale imbottiti.
Rivestimento in tessuto o pelle.

Stool with structure in wood.
Upholstered seat and back.
Covered in fabric or leather.

cod. MD108
L 49 P 54,5 H 106 cm / *W 19″ D 21″ H 41″*

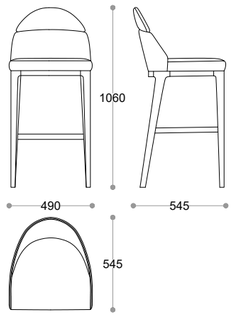



–Rose

Stool

design
CRS Medea 1905

Sgabello con struttura in legno.
Seduta e schienale imbottiti.
Rivestimento in tessuto o pelle.

Stool with structure in wood.
Upholstered seat and back.
Covered in fabric or leather.

cod. MD105
L 53 P 57 H 103 cm / *W 20″ D 22″ H 40″*

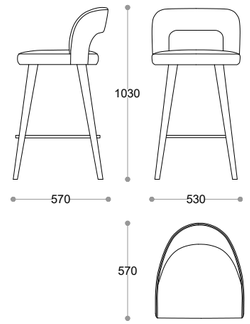



Arum —

Coffee table

design
Studia 54

Tavolino con top in marmo o specchio.
Dettagli in metallo e pelle.

Coffee table with marble or mirror top.
Metal and leather details.

cod. MD311
L 100 P 100 H 22 cm / *W 39″ D 39″ H 8″*

cod. MD312
L 100 P 100 H 30 cm / *W 39″ D 39″ H 11″*

cod. MD313
L 80 P 80 H 45 cm / *W 31″ D 31″ H 17″*

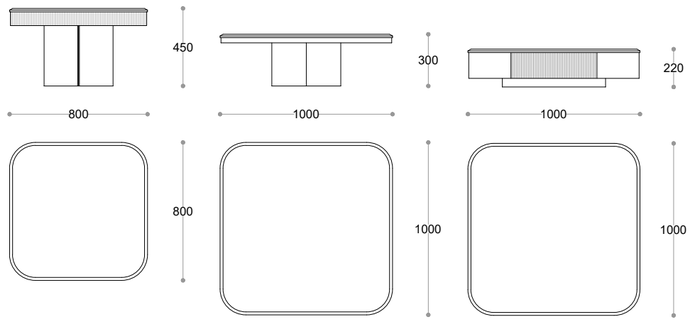

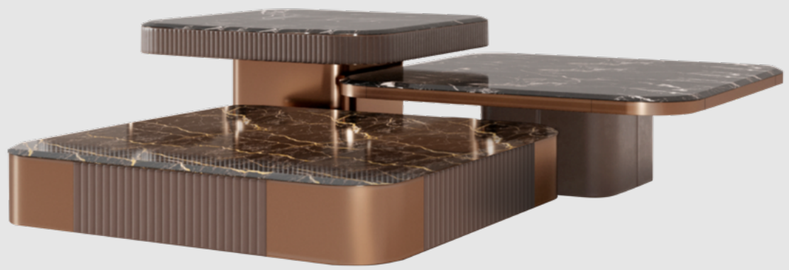

Morgan—

Coffee table

design
Umberto Asnago

Tavolino con top in legno e base in metallo.

Coffee table with wood top and metal base.

cod. HE316
L 130 P 120 H 29 cm / W 51″ D 47″ H 11″

cod. HE317
L 180 P 78 H 32,5 cm / W 70″ D 30″ H 12″

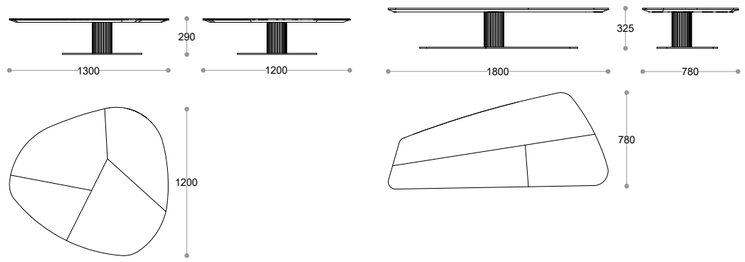



—Morgan

Side table

design
Umberto Asnago

Tavolino con top in legno e base in metallo.

Coffee table with wood top and metal base.

cod. HE318
L 63 P 57,5 H 59,5 cm / *W 24″ D 22″ H 23″*

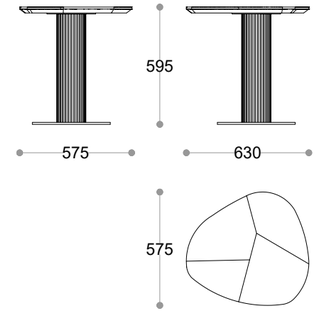





Arthur —

Coffee table

design
CRS Medea 1905

Tavolini con base in metallo.
Top disponibile in legno, marmo o specchio.

Coffee tables with metal base.
Top available in wood, marble or mirror.

cod. HE331
L 124 P 124 H 35 cm / *W 48″ D 48″ H 13″*

cod. HE335
L 124 P 84 H 35 cm / *W 48″ D 33″ H 13″*

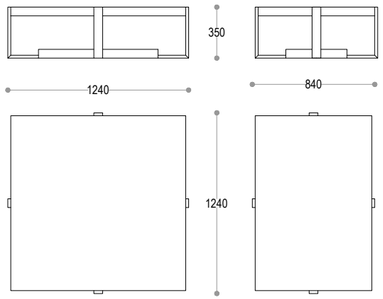



— Arthur

Side table

design
CRS Medea 1905

Tavolini con base in metallo.
Top disponibile in legno, marmo o specchio.

Coffee tables with metal base.
Top available in wood, marble or mirror.

cod. HE333
L 64 P 60 H 60 cm / *W 25″ D 23″ H 23″*

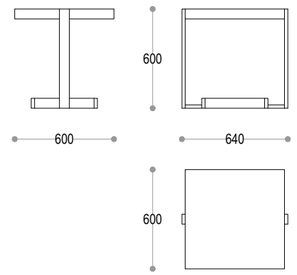





Ido —

Coffee table

design
Umberto Asnago

Tavolini con base in metallo.
Top disponibile in marmo o vetro retrolaccato.

Coffee tables with metal base.
Top available in marble or backlacquered glass.

cod. MD303
L 130 P 120 H 34 cm / *W 51″ D 47″ H 14″*

cod. MD304
L 130 P 120 H 28,5 cm / *W 51″ D 47″ H 11″*

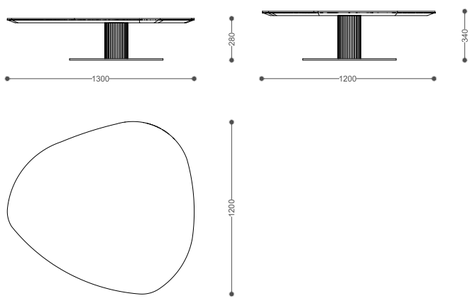

— Ido

Side table

design
Umberto Asnago

Tavolino con base in metallo.
Top disponibile in marmo o vetro retrolaccato.

Side table with metal base.
Top available in marble or backlacquered glass .

cod. MD305
L 63 P 57,5 H 59 cm / *W 25″ D 22″ H 23″*

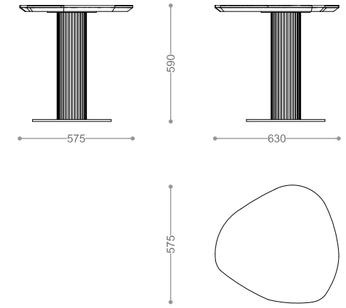







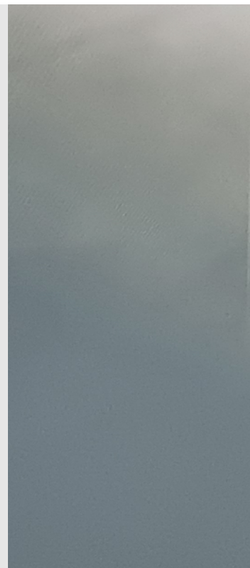

Roma —

Coffee table

design
CRS Medea 1905

Tavolini con struttura in metallo.
Top disponibile in marmo o legno.

Coffee tables with metal structure.
Top available in marble or wood.

cod. MD306
Ø48 H 47 cm / *Ø19″ H 18″*

cod. MD307
Ø48 H 57 cm / *Ø19″ H 22″*

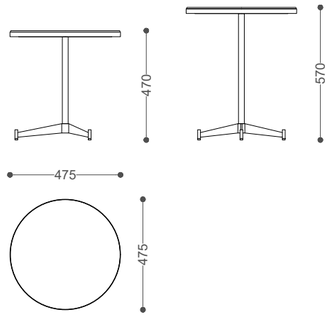







James—

Side table

design
Umberto Asnago

Tavolino con struttura legno e inserto in cuoio. Base in metallo.

Side table in wood and rawhide leather inserts. Metal base.

cod. HE305
Ø 46 H 56 cm / *Ø 18″ H 22″*

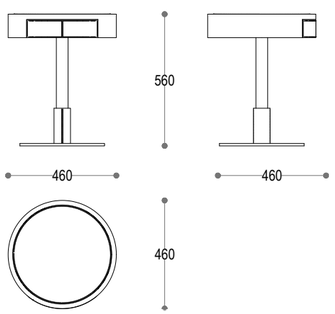



—Melody

Side table

design
CRS Medea 1905

Tavolino con base in metallo.
Top disponibile in marmo o specchio.

Side table with metal base.
Top available in marble or mirror.

cod. HE307
Ø 50 H 47 | 47,5 cm / *Ø 19″ H 18″*

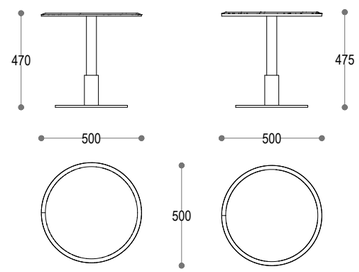



Holly —

Side table

design
Studia 54

Tavolino con struttura in legno.

Side table in wood structure.

cod. MD320
Ø 40 H 60 cm / *Ø 15″ H 23″*

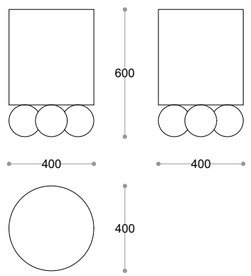



—Poppy

Side table

design
Studia 54

Tavolino con top in marmo o specchio.
Base rivestita e dettaglio in metallo.

Side table with marble or mirror top.
Upholstered base and metal detail.

cod. MD302
Ø 40 H 50 cm / *Ø 15″ H 19″*

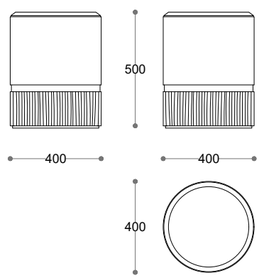



— Jasmine

Console

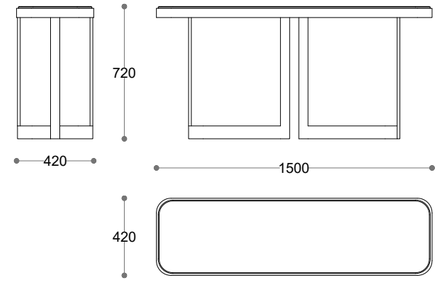

design
Studia 54

Console con base in metallo.
Top in marmo o specchio.

Console with metal base.
Marble or mirror top.

cod. MD915
L 150 P 42 H 72 cm / W *59″ D 15″ H 27″*



Iris —

Console

design
Studia 54

Console con base in metallo.
Top in marmo o specchio.

Console with metal base.
Marble or mirror top.

cod. MD801.M1
L 190 P 40 H 85 cm / *W 74″ D 15″ H 33″*

cod. MD801.M2
L 160 P 40 H 85 cm / *W 62″ D 15″ H 33″*

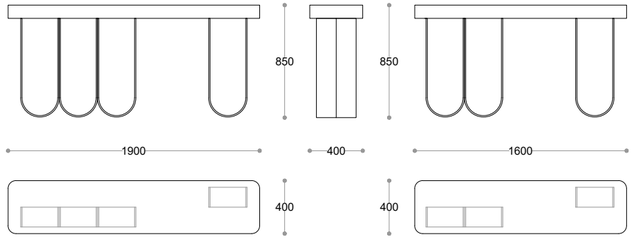



—Cavalier

Console

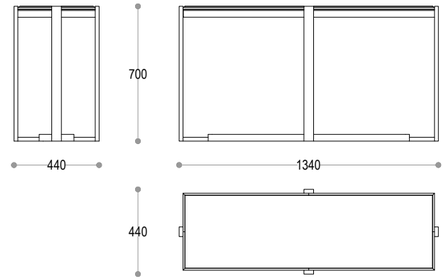

design
CRS Medea 1905

Console con base in metallo.
Top disponibile in marmo.

Console with metal base.
Top available in marble.

cod. MN805
L 134 P 44 H 70 cm / *W 52″ D 17″ H 27″*



Victura—

Console

design
CRS Medea 1905

Console con top e base in legno.
Parte centrale in metallo.

Console with top and base in wood.
Central part in metal.

cod. HE821
L 160 P 40 H 76,5 cm / *W 62″ D 15″ H 30″*

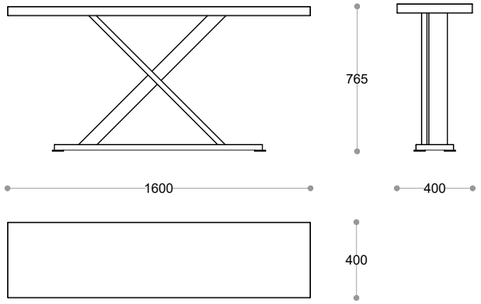





Index —

Dining room _____ 003

Living room _____ 043

Bedroom _____ 131

Office _____ 181

General index _____ 201



Tulip —

Bed

design
Studia 54

Letto con struttura in legno e rivestito
in tessuto o pelle. Dettagli in metallo.

Bed with wooden structure and upholstered in fabric or leather. Metal details.

cod. MD001.M1
L 410 P 221 H 153 cm / W 161″ D 87″ H 60″
dimensione interna / internal dimensions:
200 x 200 cm / 78″ x 78″

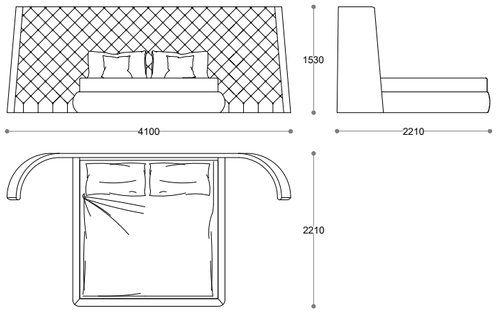





— Empire

Bed

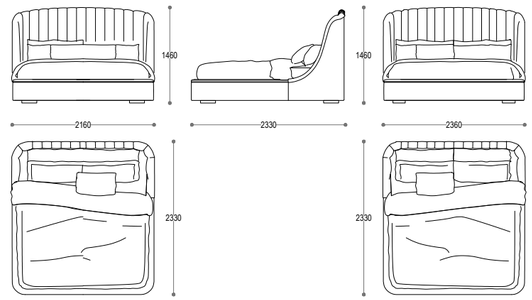

design
CRS Medea 1905

Letto rivestito in tessuto o pelle.
Dettagli in metallo.

Upholstered bed in fabric or leather. Metal details.

cod. VG004.M1
L 236 P 233 H 146 cm / W 92″ D 91″ H 57″
dimensione interna / internal dimensions:
200 x 200 cm / 78″ x 78″

cod. VG004.M2
L 216 P 233 H 146 cm / W 85″ D 91″ H 57″
dimensione interna / internal dimensions:
180 x 200 cm / 70″ x 78″



Shell —

Bed

design
Euro Sironi

Letto imbottito rivestito in
tessuto o pelle. Dettagli in metallo.

Upholstered bed in fabric or leather.
Metal details.

cod. VG001.M1
L 236 D 233 H 146 cm / W 92″ D 91″ H 57″
dimensione interna / internal dimensions:
200 x 200 cm / 78″ x 78″

cod. VG001.M2
L 216 P 233 H 146 cm / W 85″ D 91″ H 57″
dimensione interna / internal dimensions:
180 x 200 cm / 70″ x 78″

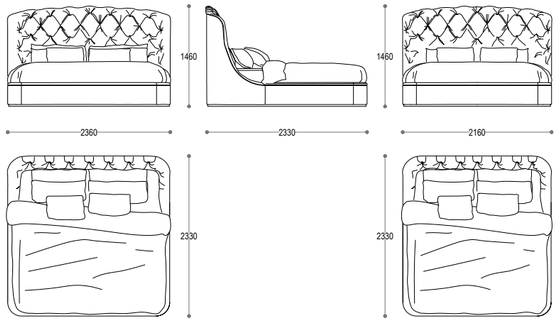





Cameron—

Bed

design
CRS Medea 1905

Letto con testata e struttura in legno, imbottite e rivestite in pelle o tessuto. Gambe in legno massello.

Bed with wooden headboard and frame, upholstered and covered in leather or fabric. Solid wood legs.

cod. MD002.M1
L 230 P 240 H 124 cm
W 90″ D 94″ H 48″

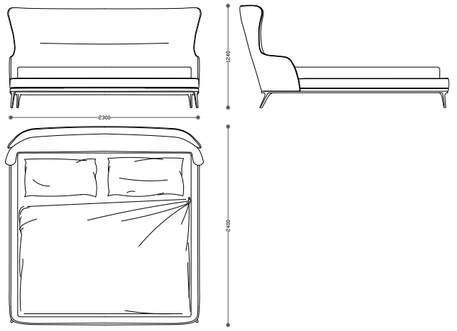







—Margot

Bed

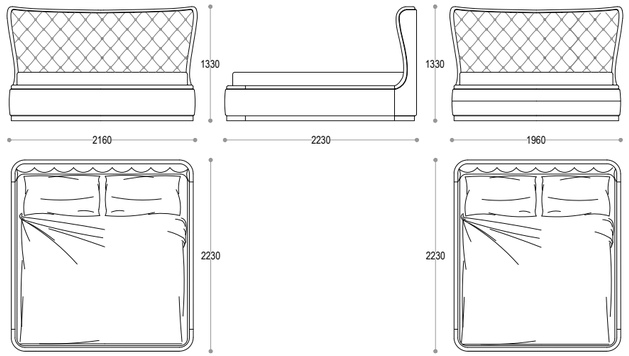

design
CRS Medea 1905

Letto con struttura in legno e testata imbottita in capitonnè. Basamento in legno.

Bed with wooden structure and upholstered headboard in capitonè. Base in wood.

cod. HE001.M1
L 216 P 223 H 133 cm / W 85″ D 87″ H 52″
dimensione interna / internal dimensions:
200 x 200 cm / 78″ x 78″

cod. HE001.M2
L 196 P 223 H 133 cm / W 77″ D 87″ H 52″
dimensione interna / internal dimensions:
180 x 200 cm / 70″ x 78″





Body —

Bed

design
Umberto Asnago

Letto con struttura in legno e rivestimento in tessuto o pelle.

Bed with structure in wood and upholstered in fabric or leather.

cod. MN002.M1
L 213 P 240 H 130 cm / W 83″ D 94″ H 51″
dimensione interna / internal dimensions:
200 x 200 cm / 78″ x 78″

cod. MN002.M2
L 193 P 240 H 130 cm / W 75″ D 94″ H 51″
dimensione interna / internal dimensions:
180 x 200 cm / 70″ x 78″

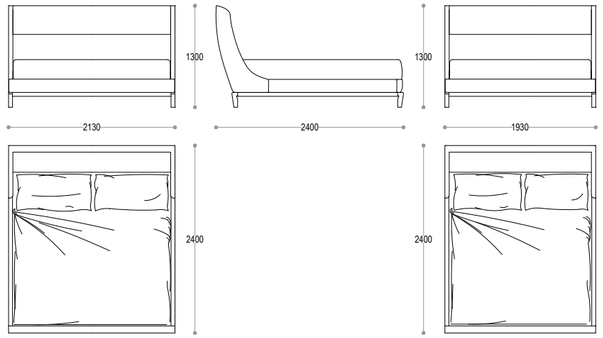







—Pascal

Bed

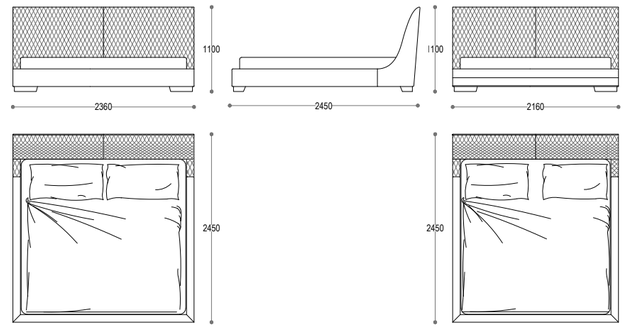

design
Umberto Asnago

Letto imbottito con basamento in legno.
Rivestimento in tessuto o pelle.

Upholstered bed with wooden base.
Covered in fabric or leather.

cod. HE002.M1
L 236 P 245 H 110 cm / W 92″ D 96″ H 43″
dimensione interna / internal dimensions:
200 x 200 cm / 78″ x 78″

cod. HE002.M2
L 216 P 245 H 110 cm / W 85″ D 96″ H 43″
dimensione interna / internal dimensions:
180 x 200 cm / 70″ x 78″







—Greg

Bed

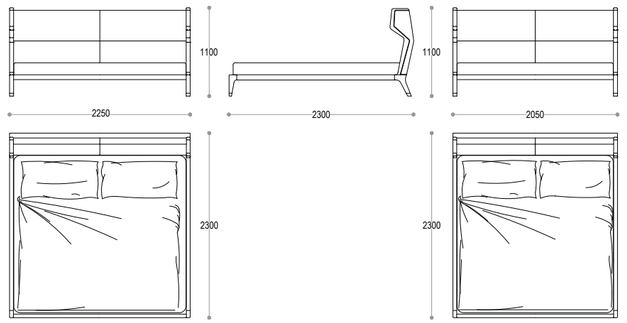

design
Matteo Nunziati

Letto struttura in legno e rivestito in tessuto o pelle.

Bed structure in wood and upholstered in fabric or leather.

cod. MI001.M1
L 225 D 230 H 110 cm / W 88″ D 90″ H 43″
dimensione interna / internal dimensions:
200 x 200 cm / 78″ x 78″

cod. MI001.M2
L 205 P 230 H 110 cm / W 80″ D 90″ H 43″
dimensione interna / internal dimensions:
180 x 200 cm / 70″ x 78″



Glory —

Bedside table

design
Studia 54

Comodino rivestito in pelle, top in marmo o specchio. Gambe e dettagli in metallo.

Bedside table upholstered in leather with marble or mirror top. Metal legs and details.

cod. MD111
Ø 50 H 58 cm / Ø 19″ H 22″

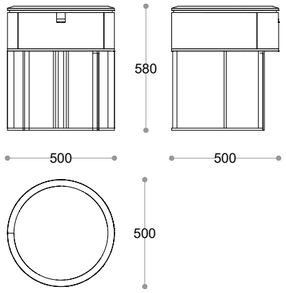





—Glory

Chest of Drawers

design
CRS Medea 1905

Comò rivestito in pelle, top in marmo o specchio. Gambe e dettagli in metallo.

Chest of drawers upholstered in leather with marble or mirror top. Metal feet and details.

cod. MD121
L 145 P 54 H 80 cm / W 57″ D 21″ H 31″

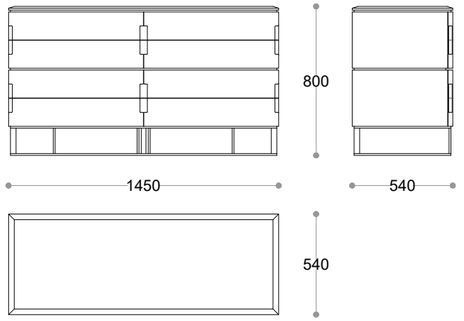



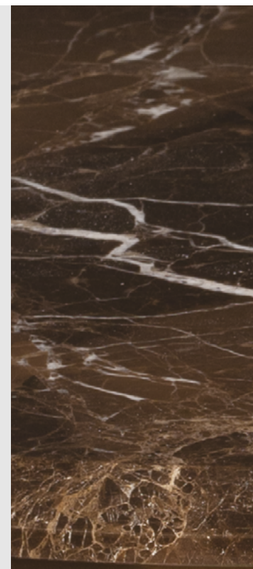

Cavour —

Bedside table

design
CRS Medea 1905

Comodino con struttura in legno. Frontali e maniglie in cuoio. Basamento in legno.

Bedside table with structure in wood. Front panels and handles in rawhide leather. Wood base.

cod. MN111.M1
L 58 P 42 H 44 cm / W 22″ D 16″ H 17″

cod. MN111.M2
L 78 P 52 H 56 cm / W 30″ D 20″ H 22″

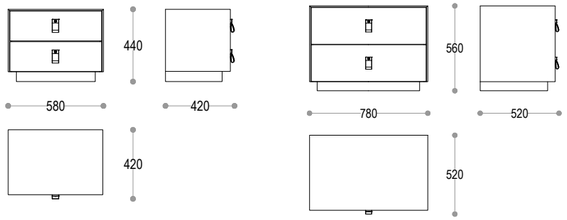





—Cavour

Chest of Drawers

design
CRS Medea 1905

Comò con struttura in legno.
Frontali e maniglie in cuoio.
Basamento in legno.

Chest of drawers with structure in wood. Front panels and handles in rawhide leather. Wood base.

cod. MN121.M1
L 128 P 52 H 86 cm /W 50″ D 20″ H 33″

cod. MN121.M2
L 168 P 52 H 86 cm / W 66″ D 20″ H 33″

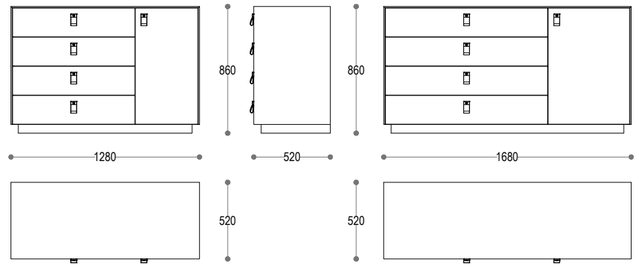





Visconti—

Bedside table

design
Matteo Nunziati

Comodino struttura legno e dettagli in metallo.

Bedside table with wooden structure and metal details.

cod. MI112.M1
L 57 P 46 H 49 cm / W 22″ D 18″ H 19″

cod. MI112.M2
L 80 P 46 H 49 cm / W 31″ D 18″ 4 H 19″

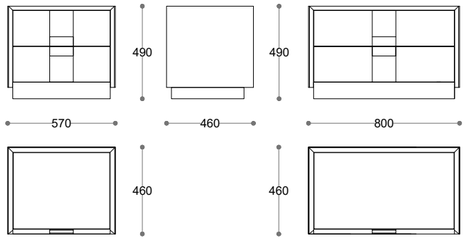





—Visconti

Chest of Drawers

design
Matteo Nunziati

Comò con struttura in legno e dettagli in metallo.

Chest of drawers with wooden structure and metal details.

cod. MI122.M1
L 140 P 54 H 87 cm / W 55″ D 21″ H 34″

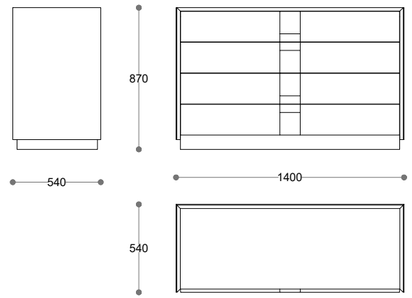





Greg —

Bedside table

design
Matteo Nunziati

Comodino con cassetto in legno e top in cuoio. Dettagli in metallo.

Bedside table with drawer in wood and top in rawhide leather. Metal details.

cod. MI111
L 61 P 47 H 50 cm / W 24″ D 18″ H 19″

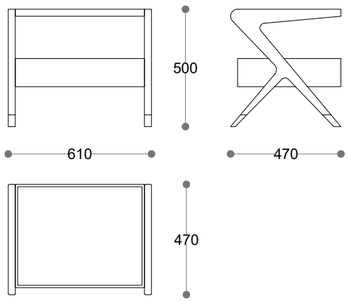





Bridge —

Dressing table

design
Umberto Asnago

Scrittoio con struttura in legno
e inserti in cuoio.

Desk with structure in wood and rawhide leather inserts.

cod. MN903
L 145 P 50 H 86 cm / W 57″ D 19″ H 33″

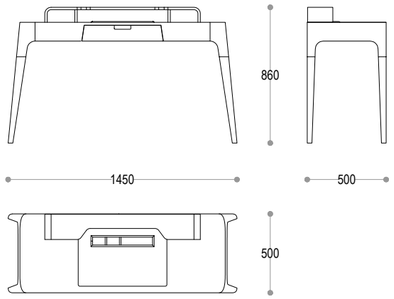





— Glory

Dressing table

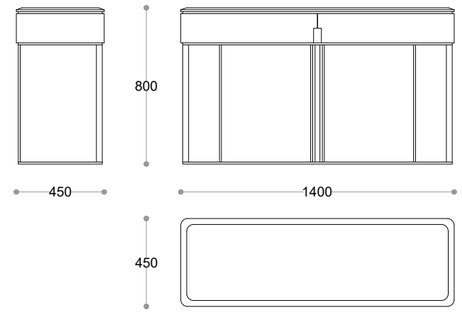

design
Studia 54

Toilette rivestita in pelle, top in marmo o specchio. Gambe e dettagli in metallo.

Dressing table upholstered in leather with marble or mirror top. Metal legs and details.

cod. MD901
L 140 P 45 H 80 cm / W 55″ D 17″ H 31″



Daisy —

Bench

design
Studia 54

Panca con struttura in legno
e seduta imbottita.

Bench with wooden structure and upholstered seat.

cod. MD511
L 150 P 55 H 42 cm / W 59″ D 21″ H 16″

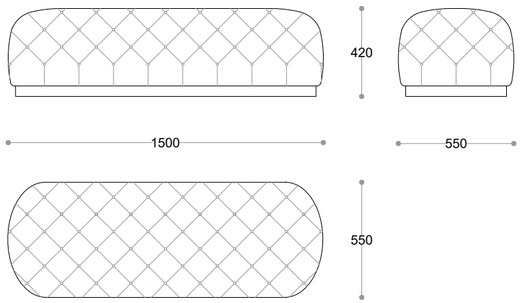

— Margot

Bench

design
CRS Medea 1905

Panca con basamento legno e
seduta imbottita. Seduta apribile.

Bench with basement in wood and upholstered seat. Openable top.

cod. HE101
L 163 P 47 H 50 cm / W 64″ D 18″ H 19″

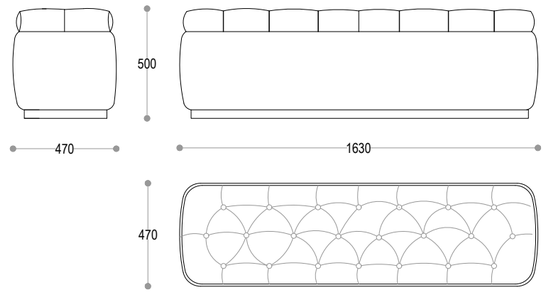











Barth —

Pouf

design
Euro Sironi

Panca con rivestimento in tessuto o pelle.
Disponibile con inserto in marmo.

Bench with upholstery in fabric or leather.
Also available with marble insert.

cod. VG552
L 180 P 82 H 35 cm / *W 70″ D 32″ H 13″*

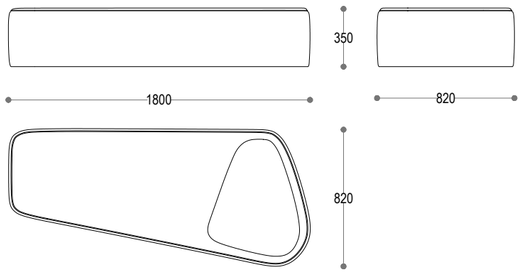





Poppy —

Pouf

design
Studia 54

Pouf con struttura in legno.
Rivestimento in tessuto o pelle.

Pouff with structure in wood.
Upholstery in fabric or leather.

cod. MD521
Ø 40 H 48 cm / *Ø 15″ H 18″*

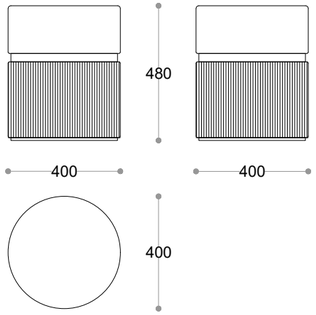



—Daisy

Pouf

design
Studia 54

Pouf con basamento in legno e
seduta imbottita.

Pouff with basement in wood
and upholstered seat.

cod. MD501
Ø 95 H 40 cm / *Ø 37 ″ H 15″*

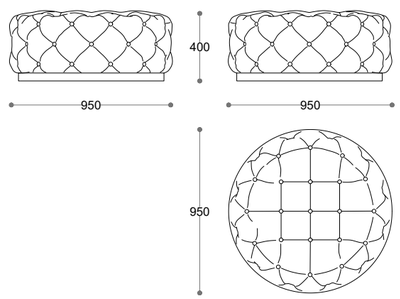



Belt —

Pouf

design
CRS Medea 1905

Pouf imbottito.
Rivestimento tessuto o pelle.

Upholstered pouf.
Covered in fabric or leather.

cod. HE556
L 41 P 41 H 53 cm / *W 16″ D 16″ H 20″*

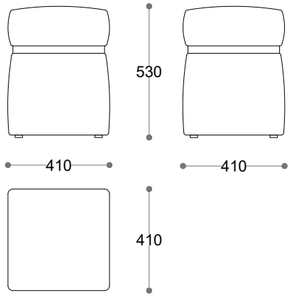



—Globe

Pouf

design
CRS Medea 1905

Pouf imbottito.
Rivestimento in tessuto o pelle.

Upholstered pouf covered
in fabric or leather.

cod. HE557
Ø 45 H 45 cm / *Ø 17″ H 17″*

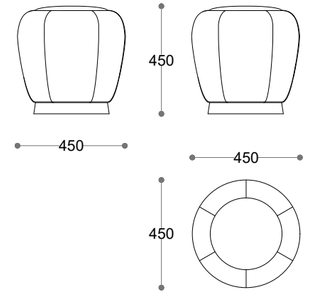





Index —

Dining room ____ 003

Living room ____ 043

Bedroom ____ 131

Office ____ 181

General index ____ 201

Chairman —

Desk

design
Umberto Asnago

Scrivania con struttura in legno e inserti su piano e cassetti in cuoio.

Desk with structure in wood and rawhide leather inserts on top and drawers.

cod. MN910
L 250 P 107 H 76 cm / W 98″ D 42″ H 29″

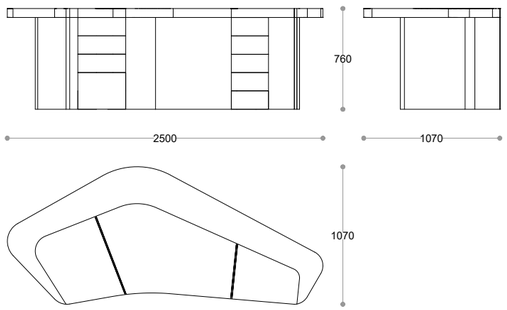





— Nathan

Desk

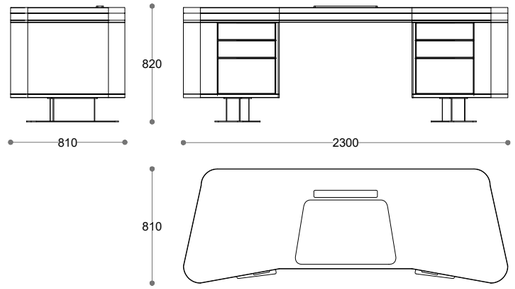

design
Umberto Asnago

Scrivania con struttura
in legno e inserti in cuoio.
Piedi e maniglie in metallo.

Desk with structure in wood,
rawhide leather inserts.
Feet and handles in metal.

cod. VG910
L 230 P 81 H 82 cm / W 90″ D 31″ H 32″



Durini —

Desk

design
Matteo Nunziati

Scrivania con struttura in legno e inserti in cuoio.

Desk with structure in wood and rawhide leather inserts.

cod. MI910.M1
L 160 P 73 H 77 cm / W 62″ D 28″ H 30″

cod. MI910.M2
L 180 P 93 H 77 cm / W 70″ D 36″ H 30″

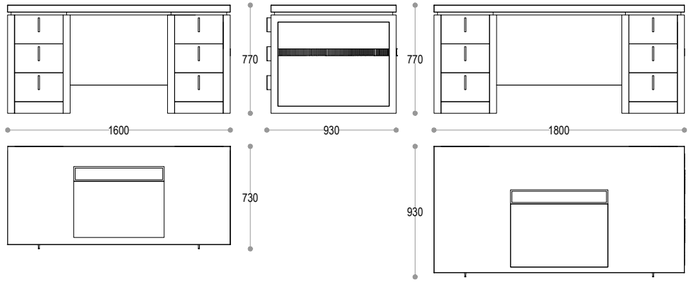





Galante —

Swivel armchair

design
Euro Sironi

Poltrona girevole imbottita.
Rivestimento in tessuto o pelle.

Upholstered swivel armchair.
Covered in fabric or leather.

cod. VG510
L 68 P 68 H 137 cm / W 26″ D 26″ H 53″

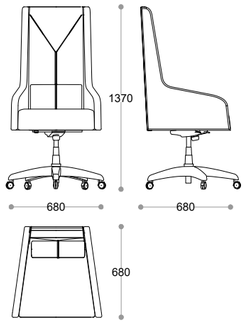





— Gala

Swivel armchair

design
Umberto Asnago

Poltrona girevole imbottita.
Rivestimento in tessuto o pelle.

Upholstered swivel armchair.
Covered in fabric or leather.

cod. MI210
L 68 P 68 H 129 cm / W 26″ D 26″ H 50″

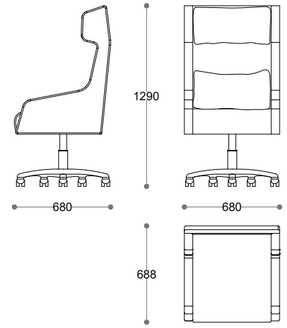





Big chic —

Swivel armchair

design
Umberto Asnago

Poltrona girevole con struttura in legno e base in metallo. Rivestimento in tessuto o pelle.

Swived armchair with structure in wood and metal base. Covered in fabric or leather.

cod. MN210
L 65 P 75 H 118 cm / W 25″ D 29″ H 46″

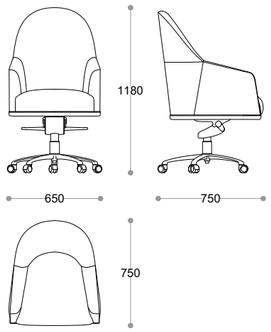





— Freesia

Bookcase

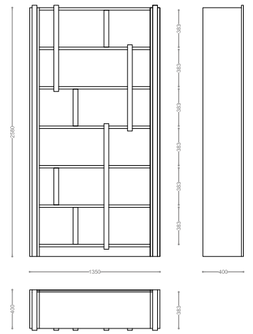

design
Studia 54

Libreria con struttura in legno
e dettagli decorativi.
Luci led.

Bookcase with structure in wood and decorative details. Led lights.

cod. MD701
L 120 P 43 H 210 cm
W 47″ D 16″ H 82″



Aster —

Screen

design
Studia 54

Paravento con pannelli in
vetro laccato e pelle.

Screen with lacquered glass and leather panels.

cod. MD800
L 240 P 7 H 220 cm / W 94″ D 2″ H 86″

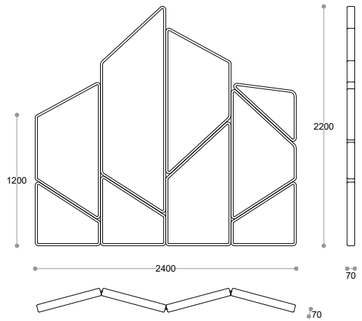

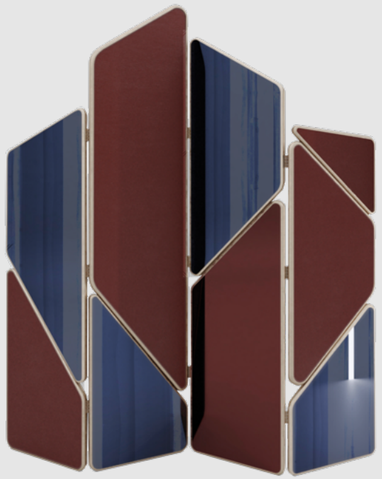



Daffodil —

Mirror

design
Studia 54

Specchio con cornice laccata.

Mirror with lacquered frame.

cod. MD890
Ø 200 P 6 cm / Ø 78″ D 2″

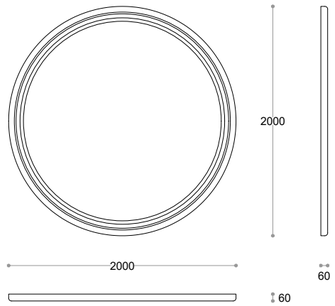

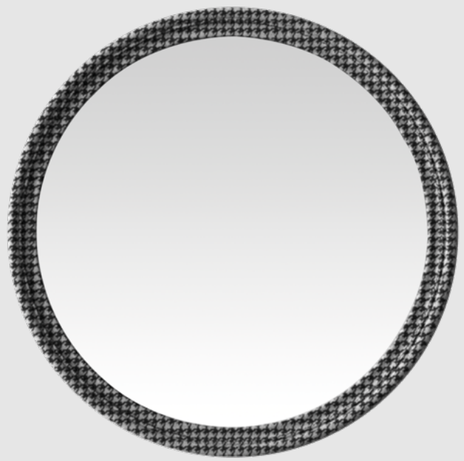



— Jillian

Mirror

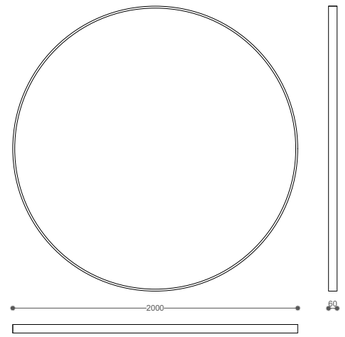

design
CRS Medea 1905

Specchio con cornice rivestita in pelle.

Mirror with frame upholstered in nabuck.

cod. MD895
Ø200 H6 cm
Ø79″ H3″

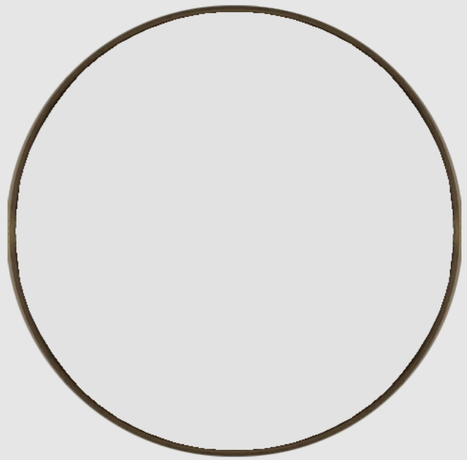



General

Index —

DINING ROOM

Tables

SAVINI - cod. **VG402**



Ø 150 H 76 cm
pag. **4**

SAVINI - cod. **VG404**



L 250 P 150 H 76 cm
pag. **6**

TOWER - cod. **HE404**



Ø 160 H 76 cm
pag. **7**

TOWER - cod. **HE403.M2/M3**



L 260/350 P 120/150 H 76 cm
pag. **9**

ROBERT - cod. **HE401.M4/M3**



L 220/280 P 120 H 75 cm
pag. **10**

FLY - cod. **HE405**



L 280 P 110 H 77 cm
pag. **13**

LOTUS - cod. **MD400**



L 250 P 120 H 76 cm
pag. **14**

GRISAM - cod. **MD401**



L 300 P 150 H 76 cm
pag. **19**

Chairs

LILY - cod. **MD100**



L 60 P 60 H 80 cm
pag. **22**

IVY - cod. **MD102**



L 60 P 60 H 80 cm
pag. **23**

CANNES - cod. **MN204**



L 57 P 57 H 80 cm
pag. **24**

ANTIBES - cod. **MN203**



L 50 P 60 H 90 cm
pag. **25**

BALIN - cod. **MD109**



L 50 P 60 H 90 cm
pag. **26**

MARTIN - cod. **MD106**



L 51 P 61 H 86 cm
pag. **28**

MARTIN - cod. **MD107**



L 55,5 P 63 H 86 cm
pag. **28**

ROSE - cod. **MD103**



L 55 P 64 H 81 cm
pag. **29**

ROSE - cod. **MD104**



L 60 P 67 H 77 cm
pag. **29**

Sideboards | Bar cabinets

MARIGOLD - cod. **MD605**



L 215 P 55 H 75 cm
pag. **30**

JULIET - cod. **MD601**



L 210 P 55 H 80 cm
pag. **33**

JULIET - cod. **MD702**



L 100 P 55 H 190 cm
pag. **37**

VISCONTI - cod. **MI601.M1/M2**



L 250/180 P 54 H 70 cm
pag. **34**

CAVOUR - cod. **MN601.M1/M2**



L 198/244 P 45 H 55/71 cm
pag. **35**

LIVING ROOM

Sofas

OLEANDER - cod. **MD550** (*)



L415 P 105 - 310 H 85 cm
pag. **42**

THOMAS - cod. **VG550** (*)



L 360 P 110 - 400 H 67 cm
pag. **47**

LIAM - cod. **MD580.C1** (*)



L 338 P 110 - 248 H 84 cm
pag. **51**

LIAM - cod. **MD580.C2** (*)



L 254 P 108 - 137 H 84 cm
pag. **52**

MAXIM - cod. **MN508** (*)



L 501 P 228 H 90,5 cm
pag. **57**

MARGOT - cod. **HE502/HE503**



L 200/256 P 100 H 83 cm
pag. **58**

COLBERT - cod. **VG502/VG503**



L 200/250 P 105 H 75 cm
pag. **63**

PEONY - cod. **MD520**



L 180 P 80 H 60 cm
pag. **64**

(*) Altri moduli disponibili a listino.

(*) *Other modules available in the price list.*

Armchairs

EVA cod. **MD510**



L 73 P 93 H 106 cm
pag. **67**

BRERA - cod. **HE505**



L 83 P 80 H 114 cm
pag. **68**

DAHLIA - cod. **MD210**



L 86 P 87 H 88 cm
pag. **70**

LILY - cod. **MD201**



L 80 P 92 H 100 cm
pag. **73**

MANDY - cod. **MN511**



L 78 P 90 H 93 cm
pag. **74**

MANILA - cod. **MI541**



L 83 P 74 H 73 cm
pag. **78**

MARTIN - cod. **MD203**



L 70 P 71 H 86,5 cm
pag. **80**

ROSE - cod. **MD202**



L 73 P 72 H 76 cm
pag. **81**

MARTIN - cod. **MD108**



L 49 P 54,5 H 106 cm
pag. **82**

ROSE - cod. **MD105**



L 53 P 57 H 103 cm
pag. **83**

LIVING ROOM

Coffee | Side Tables

ARUM - cod. **MD311**



L 100 P 100 H 22 cm
pag. **84**

ARUM - cod. **MD312**

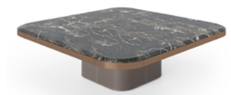

L 100 P 100 H 30 cm
pag. **84**

ARUM - cod. **MD313**

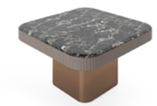

L 80 P 80 H 45 cm
pag. **84**

MORGAN - cod. **HE316**



L 130 P 120 H 29 cm
pag. **86**

MORGAN - cod. **HE317**



L 180 P 78 H 32,5 cm
pag. **86**

MORGAN - cod. **HE318**



L 63 P 57,5 H 59,5 cm
pag. **87**

ARTHUR - cod. **HE331**



L 124 P 124 H 35 cm
pag. **90**

ARTHUR - cod. **HE335**



L 124 P 84 H 35 cm
pag. **90**

ARTHUR - cod. **HE333**



L 64 P 60 H 60 cm
pag. **91**

IDO - cod. **MD303**



L 130 P 120 H 34 cm
pag. **94**

IDO - cod. **MD304**



L 130 P 120 H 28,5 cm
pag. **94**

IDO - cod. **MD305**



L 63 P 57,5 H 59 cm
pag. **95**

ROMA - cod. **MD306**



Ø 48 H 47 cm
pag. **96**

ROMA - cod. **MD307**



Ø 48 H 57 cm
pag. **96**

JAMES - cod. **HE305**



Ø 46 H 56 cm
pag. **100**

MELODY - cod. **HE307**



Ø 50 H 47/47,5 cm
pag. **101**

HOLLY - cod. **MD320**



Ø 40 H 60 cm
pag. **102**

POPPY - cod. **MD302**



Ø 40 H 50 cm
pag. **103**

LIVING ROOM

Consolles

JASMINE - cod. **MD915**



L 150 P 42 H 72 cm
pag. **105**

IRIS - cod. **MD801.M1/M2**



L 190/160 P 40 H 85 cm
pag. **106**

CAVALIER - cod. **MN805**



L 134 P 44 H 70 cm
pag. **109**

VICTURA - cod. **HE821**



L 160 P 40 H 76,5 cm
pag. **110**

BEDROOM

Beds

TULIP - cod. **MD001.M1**



L 410 P 221 H 153 cm
pag. **116**

EMPIRE - cod. **VG004.M1/M2**



L 236/216 P 233 H 146 cm
pag. **119**

SHELL - cod. **VG001.M1/M2**



L 236/216 P 233 H 146 cm
pag. **120**

CAMERON - cod. **MD002.M1**



L 230 P 240 H 124 cm
pag. **122**

MARGOT - cod. **HE001.M1/M2**



L 216/196 P 223 H 133 cm
pag. **127**

BODY - cod. **MN002.M1/M2**



L 213/193 P 240 H 130 cm
pag. **130**

PASCAL - cod. **HE002.M1/M2**



L 236/216 P 245 H 110 cm
pag. **133**

GREG - cod. **MI001.M1/M2**



L 225/205 P 230 H 110 cm
pag. **137**

Bedside tables | Chest of drawers

GLORY - cod. **MD111**



Ø 50 H 58 cm
pag. **138**

GLORY - cod. **MD121**



L 145 P 54 H 80 cm
pag. **139**

CAVOUR - cod. **MN111/M2**



L 58/78 P 42/52 H 44/56 cm
pag. **140**

CAVOUR - cod. **MN121.M1/M2**



L 128/168 P 52 H 86 cm
pag. **141**

VISCONTI - cod. **MI112/M2**



L 57/80 P 46 H 49 cm
pag. **142**

VISCONTI - cod. **MI122.M1**



L 140 P 54 H 87 cm
pag. **143**

GREG - cod. **MI111**



L 61 P 47 H 50 cm
pag. **144**

Dressing tables

BRIDGE - cod. **MN903**



L 145 P 50 H 86 cm
pag. **146**

BEDROOM

Toilette

GLORY - cod. **MD901**



L 140 P 45 H 80 cm
pag. **149**

Benches | Poufs

DAISY - cod. **MD511**



L 150 P 55 H 42 cm
pag. **150**

MARGOT - cod. **HE101**



L 163 P 47 H 50 cm
pag. **151**

BARTH - cod. **VG552**



L 180 P 82 H 35 cm
pag. **154**

POPPY cod. **MD521**



Ø 40 H 48 cm
pag. **156**

DAISY - cod. **MD501**



Ø 95 H 40 cm
pag. **157**

BELT - cod. **HE556**



L 41 P 41 H 53 cm
pag. **158**

GLOBE - cod. **HE557**



Ø 45 H 45 cm
pag. **159**

OFFICE

Writing desk

CHAIRMAN - cod. **MN910**



L 250 P 107 H 76 cm
pag. **162**

NATHAN - cod. **VG910**



L 230 P 81 H 82 cm
pag. **165**

DURINI - cod. **MI910.M1/M2**



L 160/180 P 73/93 H 77 cm
pag. **166**

Swivel armchairs

GALANTE - cod. **VG510**



L 68 P 68 H 137 cm
pag. **168**

GALA - cod. **MI210**



L 68 P 68 H 129 cm
pag. **169**

BIG CHIC - cod. **MN210**



L 65 P 75 H 118 cm
pag. **170**

Accessories

FREESIA - cod. **MD701**



L 120 P 43 H 210 cm
pag. **173**

ASTER - cod. **MD800**

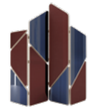

L 240 P 7 H 220 cm
pag. **174**

DAFFODIL - cod. **MD890**



Ø 200 P 6 cm
pag. **176**

JILLIAN - cod. **MD895**



Ø 200 P 6 cm
pag. **179**

Medea
1905

Meda —— Italia
Via Vignazzola 129
T. +39 0362 70585
info@medea.it
medea.it

2024 © Medea 1905 s.r.l. - Tutti i diritti riservati